ADVANCED MANUFACTURING SYSTEM SIMULATOR V2

TECHNICAL DATA SHEET

AMTEC

ADVANCED MANUFACTURING TECHNICAL EDUCATION COLLABORATIVE

AMTECWORKFORCE.ORG

LOAD CONVEYOR

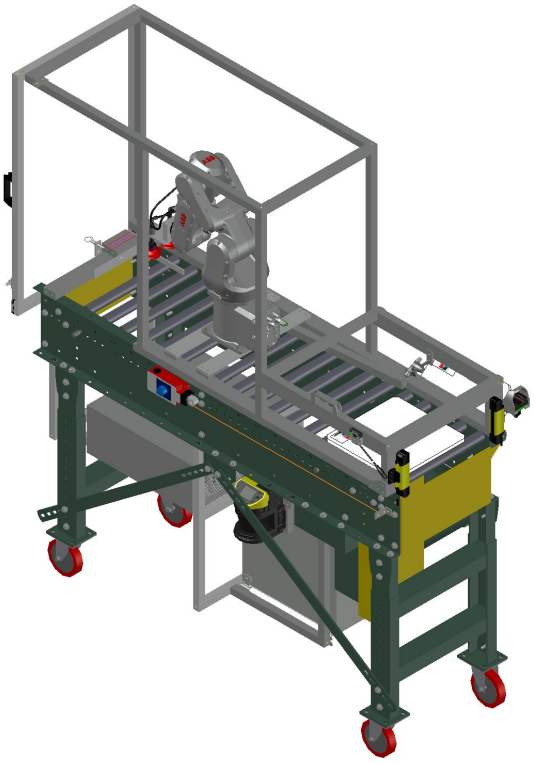

SAFETY
- Light Curtain
- Gate Switch
- Pull Cord
- Laser Scanner
- Remote In / Out Block

ETHERNET
- In / Out Block

SENSORS
- Laser Photo Eye
- Diffuse RetroReflective Photo Eye
- Optical Touch Cycle Start Button

LIGHT
- Ok to Load Puck

CONVEYOR
- Electric Motor
- Gear Reducer
- Chain / Sprocket
- Speed Controlled with Variable Frequency Drive

PUCK STOP
- Pneumatic
- Rod Cylinder with Spring Return
- Reed Position Switch

TRANSFER PUSHER (For Use When Robot Bypassed)
- Electric Cylinder with Ball Screw
- Position Switches

PUCK STORAGE

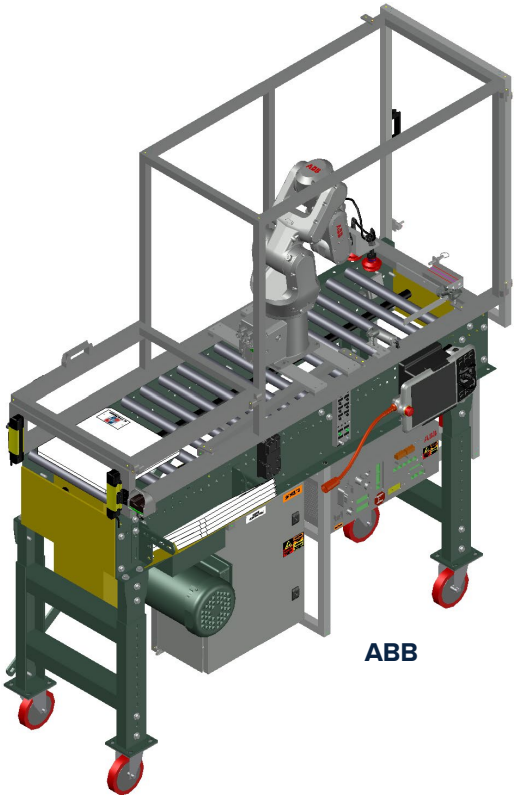

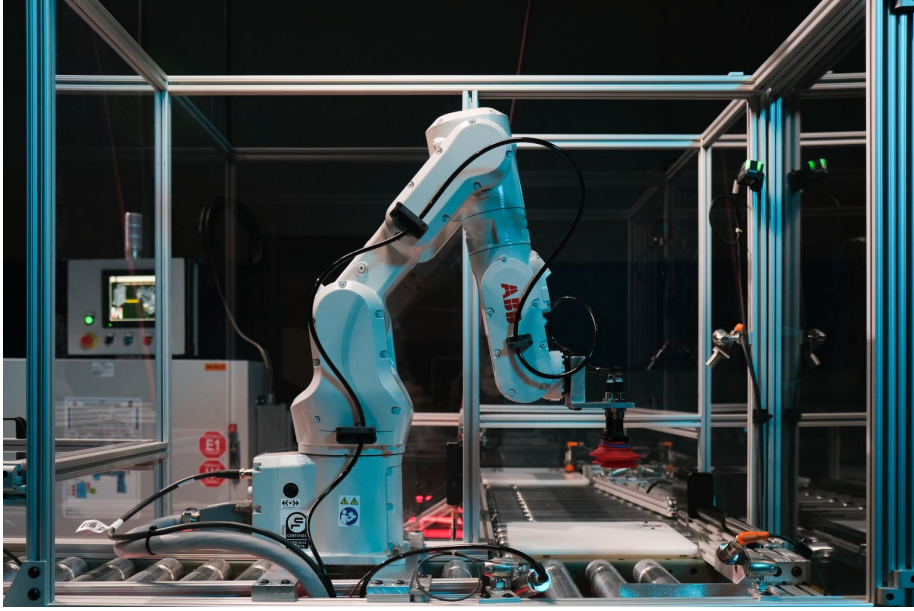

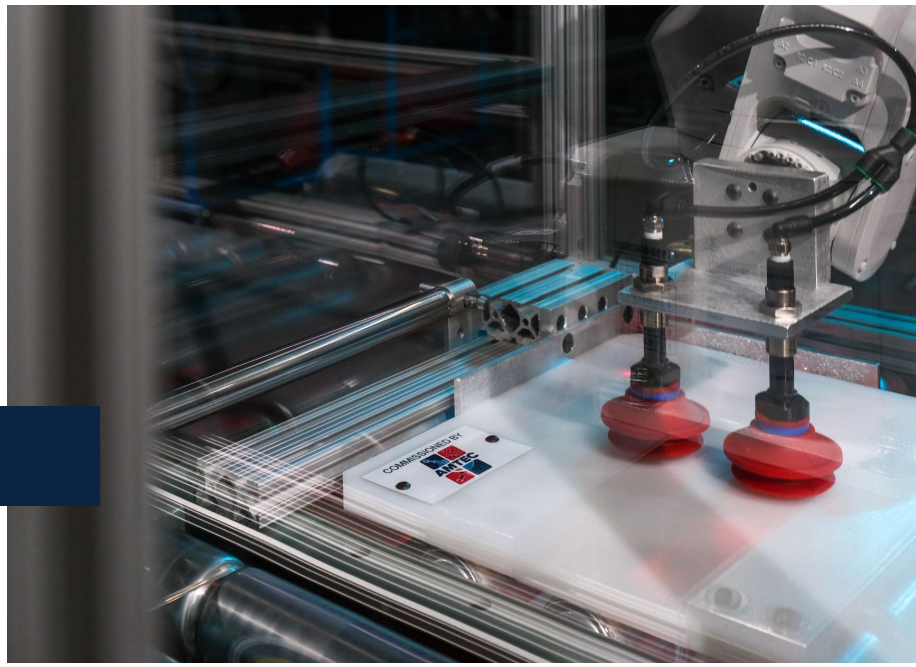

ROBOT

SAFETY
- Junction Box
- Safety I/O
- Circuit Breakers
- Terminals
- Bulkhead Connectors
- Gate Switch

ROBOT
- 6 Axis
- Controller
- Teach Pendant

ROBOT END EFFECTOR
- Vacuum Generator
- Puck Present Vacuum Sensor
- Spring Compensation Vacuum Cups

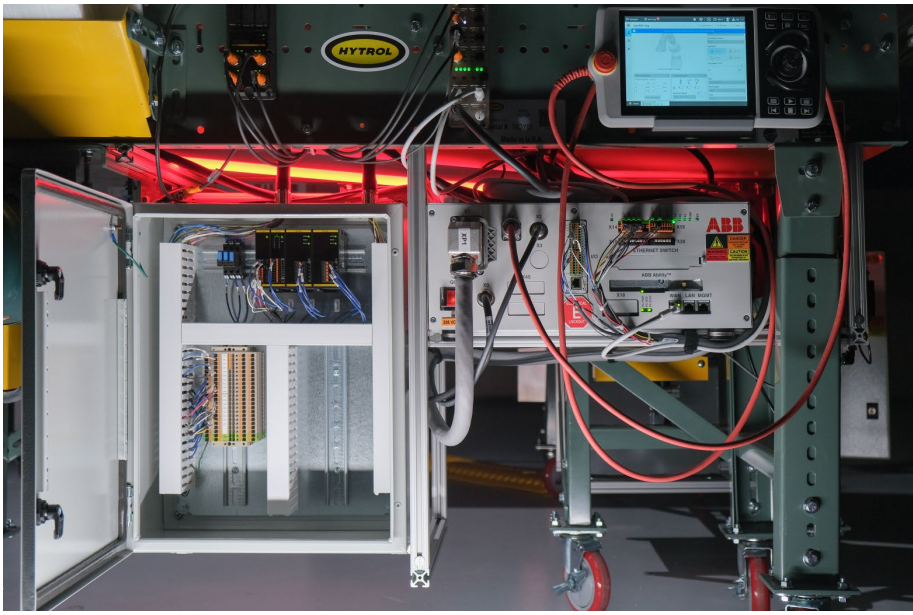

UNLOAD CONVEYOR

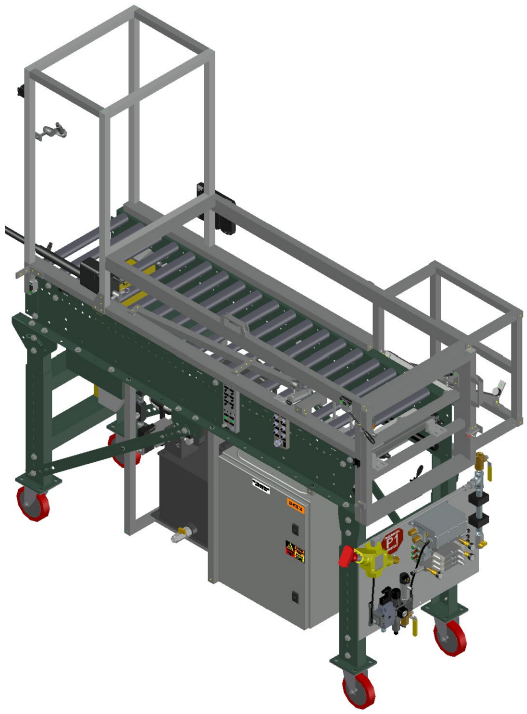

SAFETY
- Gate Switches

ETHERNET
- In / Out Block

REMOTE I/O JUNCTION BOX
- Ethernet I/O
- Ethernet Switch
- Circuit Breakers
- Vision Controller
- Terminals
- Bulkhead Connectors

DISTRIBUTION BLOCK
- Multi-Port In / Out

HYDRAULIC POWER UNIT
- Run Solenoid
- Tank Low Level Switch
- Tank Hi Temperature Switch
- Pressure Reducing Valve

HYDRAULIC MOTOR
- with Chain / Sprocket

UNLOAD PART CATCHER

VISION
- Sensor & Control Panel Display

SENSORS
- Laser Photo Eye
- Diffuse RetroReflective Photo Eye
- Ferrous Proximity Switch

PUCK STOP
- Pneumatic
- Rod Cylinder with Spring Return
- Reed Position Switch

PNEUMATIC PANEL
- Safety Lockout Valve
- Drip Leg with Lockable Venting Ball Valve
- Dump Valve (Electrically Operated)
- Pressure Regulator with Gage
- Valves with Pressure Regulators
- Pressure Switch with Analog Output

UNLOAD PUSHER
- Pneumatic Rodless Cylinder
- Magnetic Position Switches
- Mechanical Interference Device

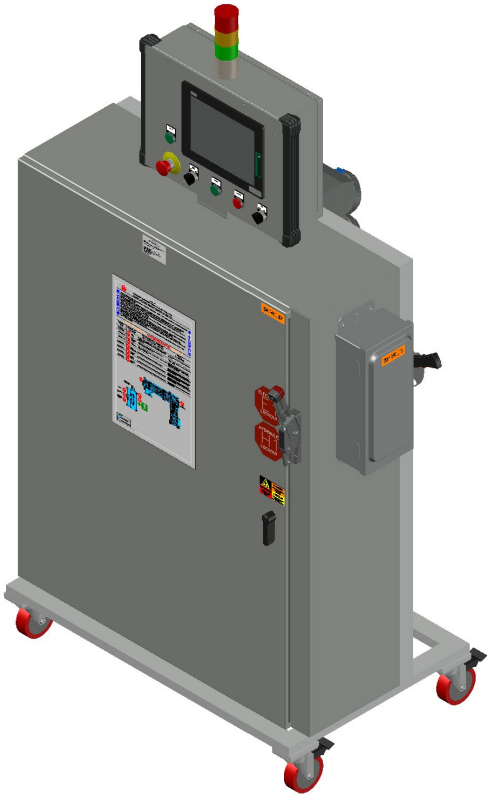

MAIN CONTROL PANEL

SAFETY
- Lockable Fused Main Electrical Disconnect
- Lockable Non-Fused Safety Switch
- Lockout / Tagout Signage
- Programmable Safety Controller
- Safety Rated Relay

HUMAN MACHINE INTERFACE (HMI) ENCLOSURE
- Handles
- Swivel
- 10.4“ Color HMI with Touch screen
- Fault Control via HMI
- Lighted Pushbuttons
- Selector Switches
- Emergency Stop Pushbutton
- Stack Light with Audible Alarm

MAIN PANEL
- 24VDC Control Power
- 220 VAC Single Phase Transformer
- Power Distribution Block
- Bus Bar Power Distribution
- Motor Circuit Protectors
- Contactors Utilizing Auxiliary Contacts
- Variable Frequency Drive with Analog Speed Control & Digital I/O Interface
- Industrial Ethernet Switch
- Ethernet Network
- Plug in Terminal Relays
- Terminals
- Wire / Cable Identification
- Component Identification Tagging
- Removable / Swappable PLC Din Rail with Connectors

POWER DISTRIBUTION QUICK DISCONNECTS
- Lockable
- Color Coded
- Keyed

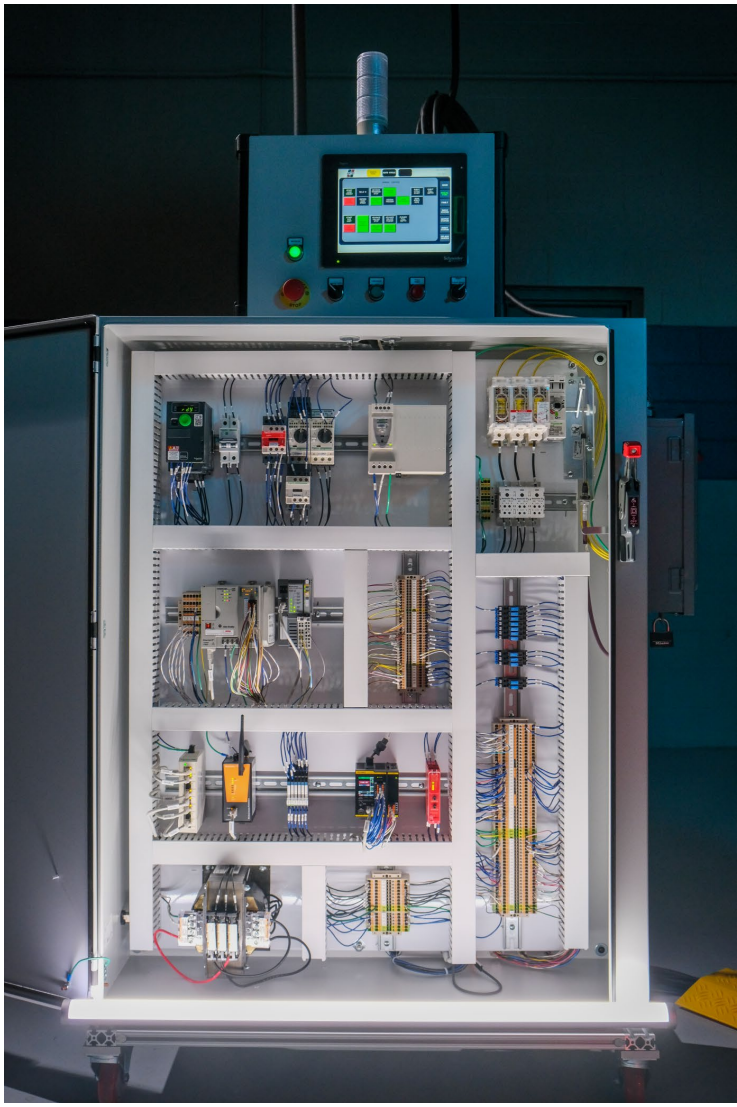

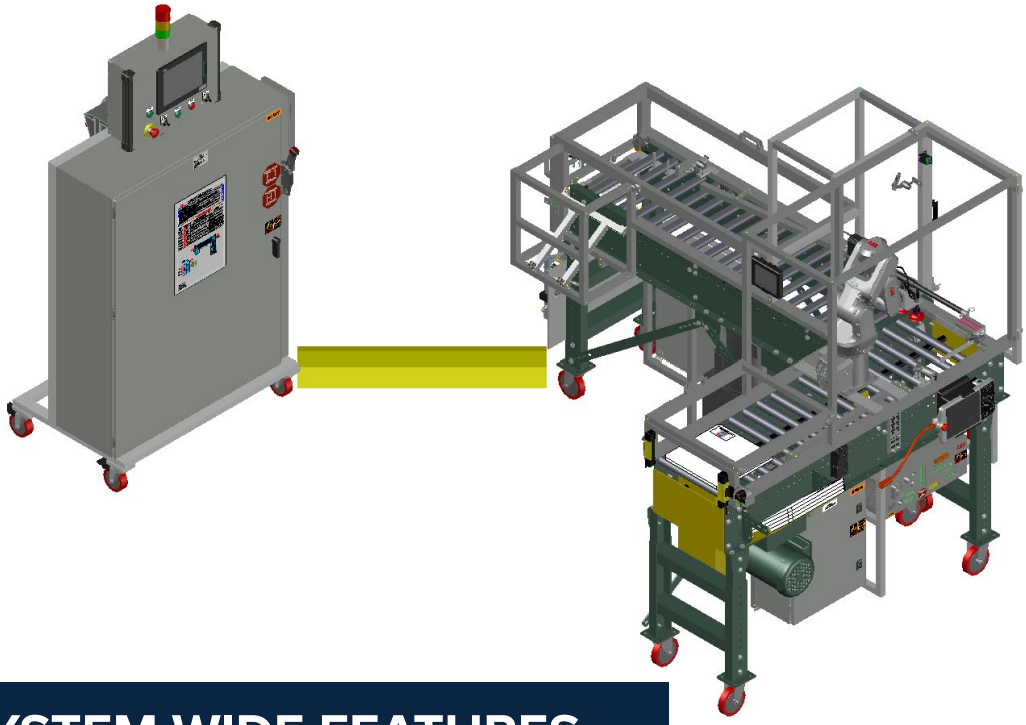

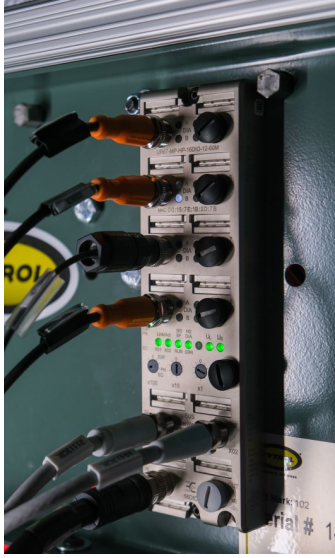

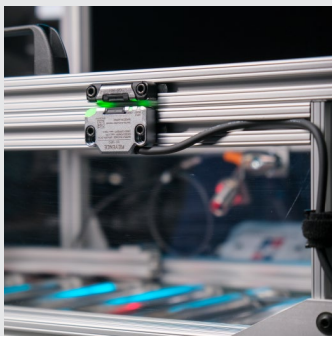

SYSTEM WIDE FEATURES

SAFETY
- Enclosed Guarding
- Clear Vision of Mechanisms
- Safety Gate Switches
- Interlock Hinged Access Doors

ENERGY CONTROL & POWER LOCKOUT - ECPL
- Lockout Placard
- Lockout Identification Tags
- OHSA Compliant
- Electrical Energy Lockout
- Hydraulic Energy Lockout
- Pneumatic Energy Lockout
- Robot Energy Lockout

DESIGN
- Industry Approved Components
- Allen Bradley PLC
- Networked Device Communications
- Pre-Programmed Faults – Fault List Provided
- Multiple Wiring Methodologies
- Simulator Comprised of 3 Sections
- Simulator on Casters for Ease of Movement
- Simulator Sections Electrically Plug In
- 220 VAC, 25 Amps, 3 Phase Power Requirement
- 80 PSI Pneumatic Drop Requirement

CONVEYORS
- Drive Shafts with Bearings
- Band Driven Rollers
- 5 LB Maximum Drive

INDUSTRIAL CABLE PROTECTOR

SCHEMATICS
- Electrical / Pneumatic / Hydraulic

PUCKS
- Metal / Plastic Colored Tags
- Vision Sensor Challenge Tag

USB STICK
- Component Literature
  - Cutsheets
  - Manuals
  - MSDS
- Schematics – PDF Files
  - Electrical
  - Pneumatic
  - Hydraulic
- Programs
  - Safety Controller
  - Safety Scanner
  - HMI
  - PLC
  - VFD
  - I/O
  - Vision
  - Fault List

SYSTEM OVERALL DIMENSIONS

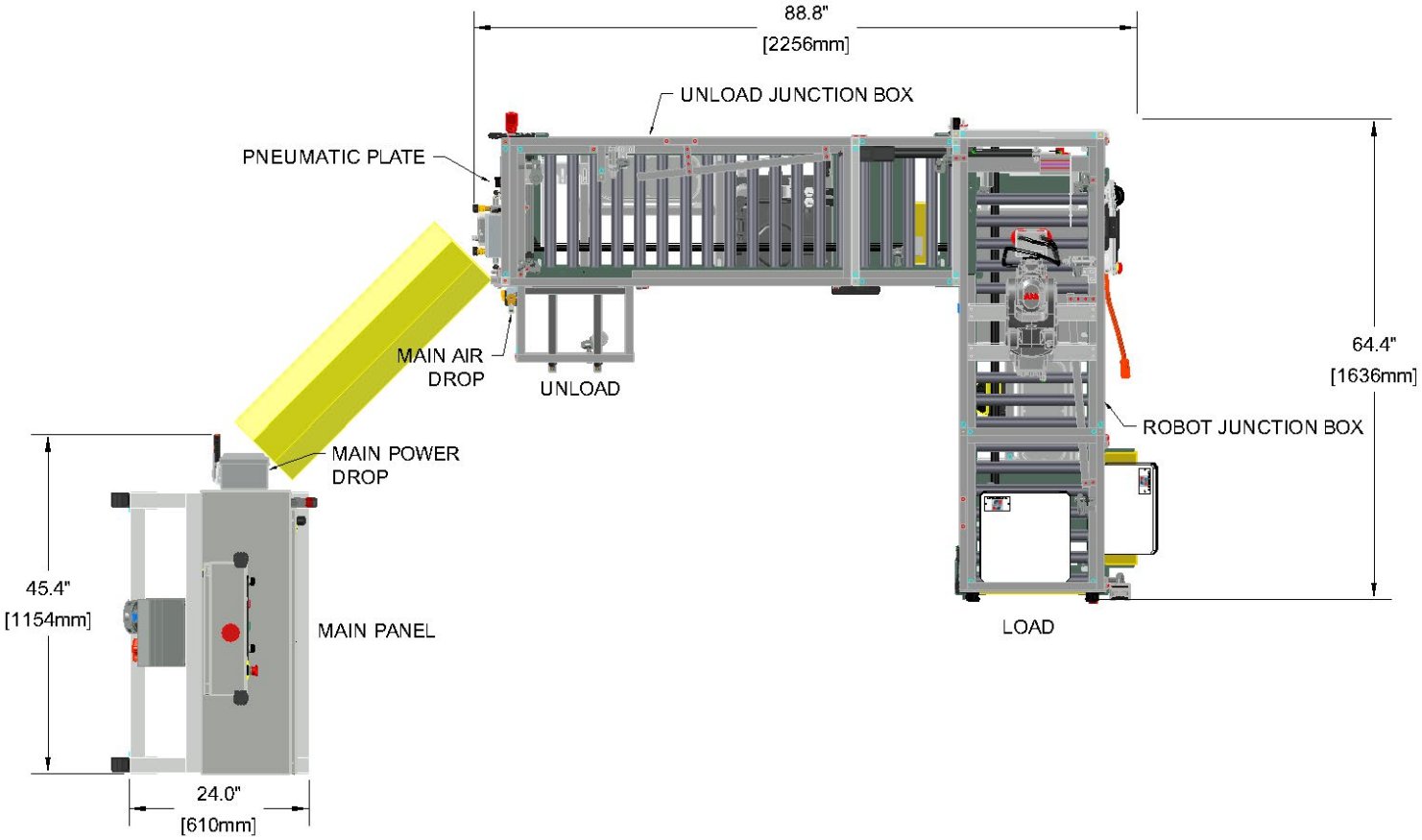

AMTEC

1501 Frederica St., Owensboro KY 42301
(270) 686-4616

AMTECworkforce.org